HUSQVARNA - КАТАЛОГ ЗАПЧАСТЕЙ

LAWN MOWERS: CONSUMER WALK-BEHINDS: HUSQVARNA LB 251S

Список запчастей

СПИСОК ЗАПЧАСТЕЙ

LAWN MOWERS: CONSUMER WALK-BEHINDS

HUSQVARNA LB 251S

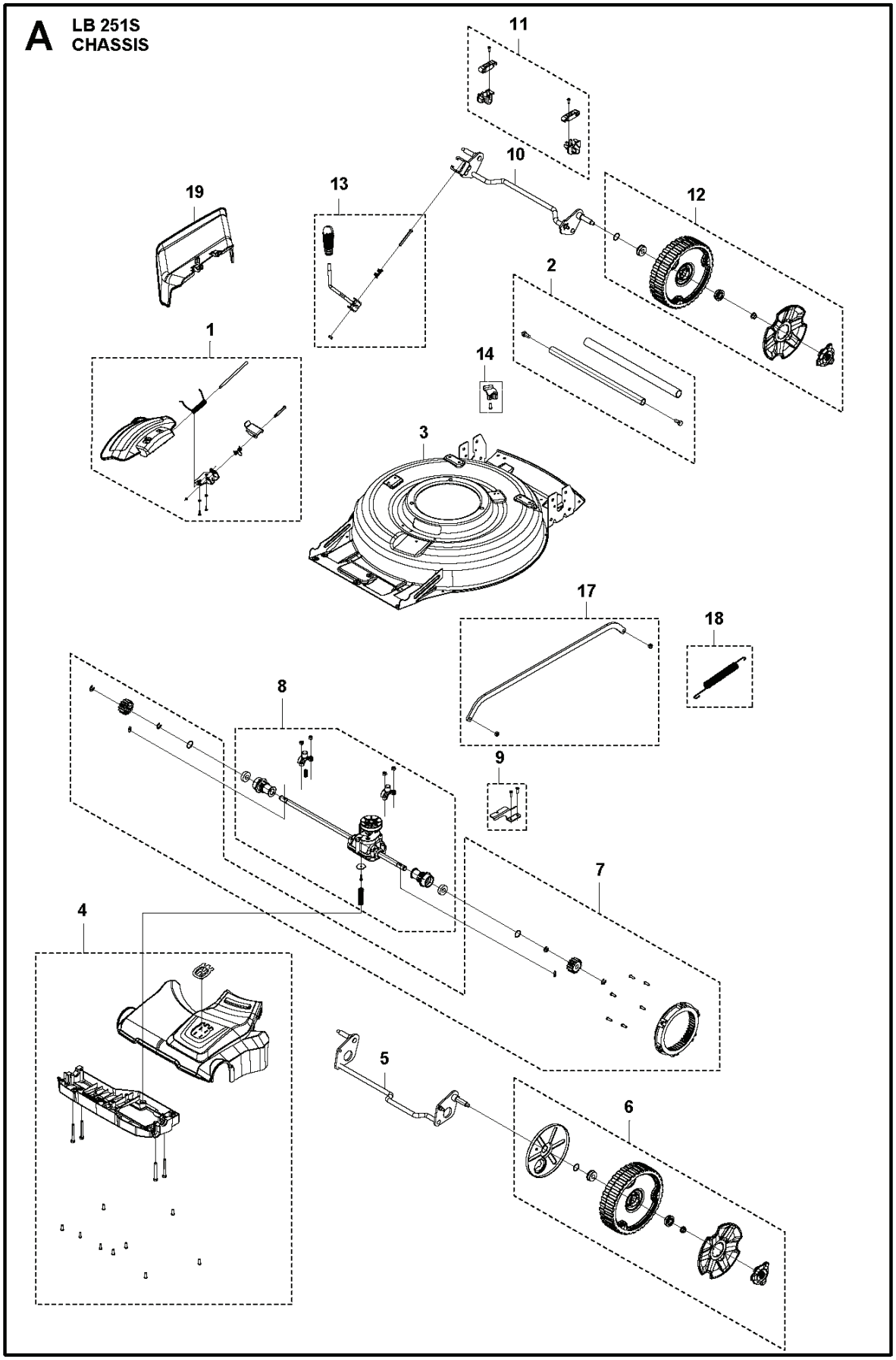
A
LB 251S
CHASSIS
11
10
19
13
12
2
1
14
3
17
18
8
9
7
4
5
6

PXM_REF	PXM_ PARTNO	ОПИСАНИЕ	PXM_REMARK	КОЛ-ВО
1	599349410	PLATE KIT	SIDE DISCHARGE PLATE	1
2	599349416	КРЫШКА		1
3	599349370	Крышка в сборе	CHASSIS	1
4	599349372	COVER KIT	FRONT COVER	1
5	599349383	AXLE	FRONT WHEEL AXLE	1
6	599349368	Колесо	FRONT WHEEL	1
7	598684117	Набор шестернь	WHEEL DRIVE	1
8	599349421	TRANSMISSION KIT	REAR TRANSMISSION	1
9	599349411	PLATE KIT	TRANSMISSION PLATE	1
10	599349384	AXLE	REAR WHEEL AXLE	1
11	599349419	SUPPORT KIT	AXLE SUPPORT KIT	1
12	599349424	Колесо	REAR WHEEL	1
13	599349401	HANDLE KIT	HEIGHT ADJUSTMENT HANDLE	1
14	599349405	Отпускной крючок к рулет.	CABLE HOOK	1
17	599349365	ROD	HEIGHT ADJUSTMENT ROD	1
18	599138901	Пружина	HEIGHT ADJUSTMENT SPRING	1
19	599349395	КРЫШКА	SIDE PROTECTION COVER	1

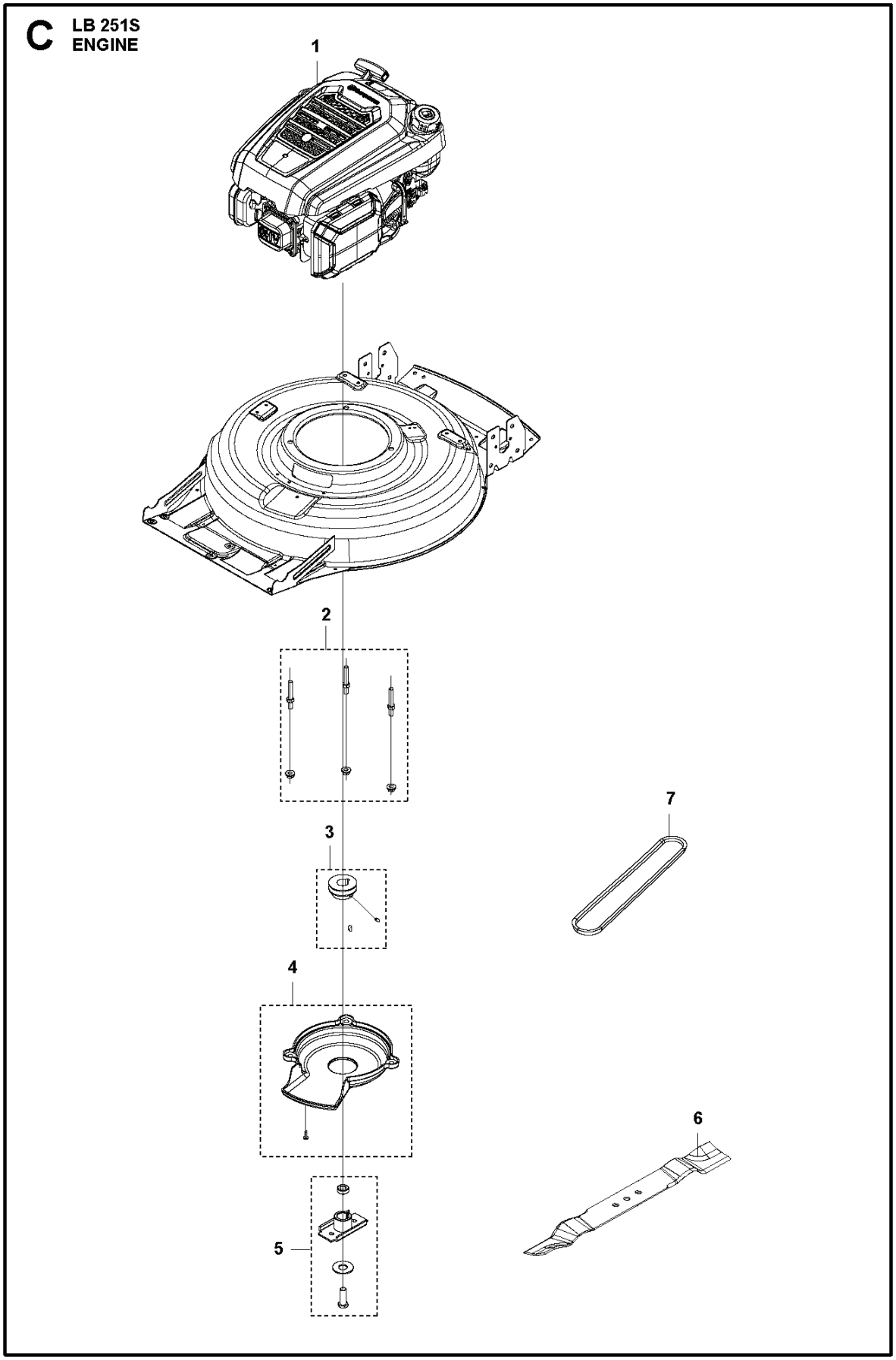
C
LB 251S
ENGINE
1
2
3
4
5
6
7

PXM_REF	PXM_ PARTNO	ОПИСАНИЕ	PXM_REMARK	КОЛ-ВО
1	TBD	TBD		1
2	599349408	INSTALLATION KIT	BOLTS AND NUTS	1
3	599349414	Шкив	DRIVE PULLEY	1
4	599349377	КРЫШКА	BELT COVER	1
5	599349375	BLADE SUPPORT	BLADE ADAPTER	1
6	597683901	Нож для обрез.веток 80 см	MULCH BLADE	1
7	599349390	Ремень приводной 272K 14"	BELT	1

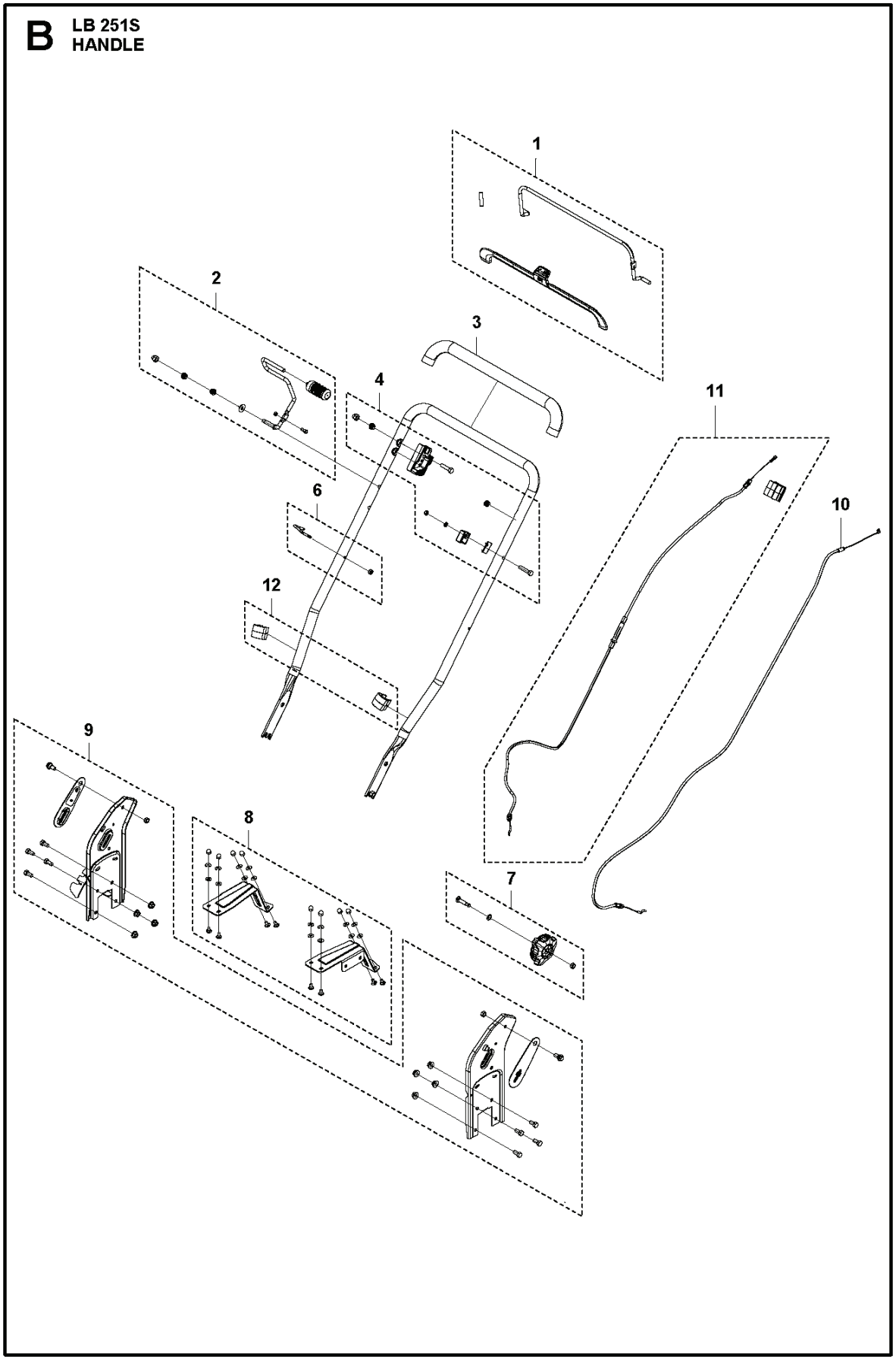
B
LB 251S
HANDLE
1
2
3
4
6
7
8
9
10
11
12

PXM_REF	PXM_ PARTNO	ОПИСАНИЕ	PXM_REMARK	КОЛ-ВО
1	529855401	BAIL ARM ASSY	BAIL ARM	1
2	599349388	BAIL		1
3	599349404	HANDLE KIT	HANDLE AND SHEATH	1
4	598684129	BAIL ARM ASSY	BAIL ARM	1
6	599349406	Отпускной крючок к рулет.	CABLE HOOK	1
7	529855501	KNOB ASSY	KNOB	1
8	599349412	PLATE KIT	SUPPORT HANDLE PLATE	1
9	599349381	SUPPORT KIT	HANDLE BRACKET	1
10	599349392	Провод	FLAMEOUT CABLE	1
11	599349394	CABLE ASSY 2035	DRIVE CABLE ASSY	1
12	598861401	CLAMP	CABLE CLIP	1